easy-trim Roofing & Construction Products

EXTENSION SLEEVE

MADE IN BRITAIN

PRODUCT: Extension Sleeve

APPLICATION:
The Extension Sleeve is designed to be used in conjunction with the Telescopic Underfloor Vent. Each extension sleeve allows the vent to vertically reach a further two brick courses and can also be fitted horizontally to the base of the Telescopic Underfloor Vent by using a Rear Extension Adaptor.

QUALITY STANDARDS:
Conforms to BS EN 13141-1 :2019 Ventilation for buildings.
Satisfies all NHBC requirements.
Manufactured to BS EN ISO 9001:2015

	COLOUR: BLACK	BOX QTY	PALLET QTY
EXTENSION SLEEVE	✓ ET/CAVITY/VEXT	5	300

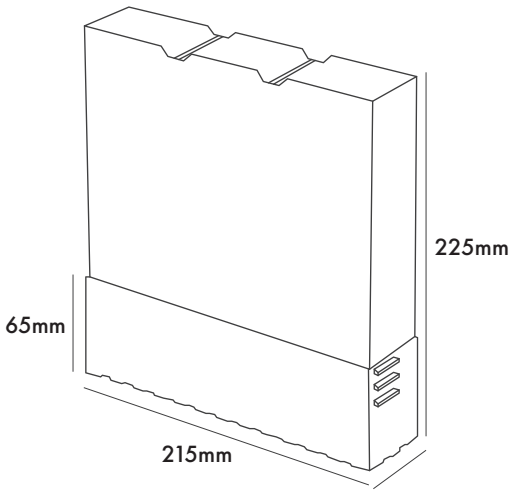

(Please note: A REAR EXTENSION ADAPTOR must be used when installing as a horizontal extension)

Unit 12B, Metcalf Drive,
Altham Industrial Estate,
Altham, Lancashire,
England, BB5 5TU

Tel 01282 930680
sales@easy-trim.co.uk
www.easy-trim.co.uk

easy-trim Roofing & Construction Products

EXTENSION SLEEVE

CAN BE USED VERTICALLY OR HORIZONTALLY*

*In horizontal applications, a REAR EXTENSION ADAPTOR must be used

VERTICAL PURPOSE:
In vertical applications the EXTENSION SLEEVE allows the vent to reach further brick courses within the wall

VERTICAL INSTALLATION:
TELESCOPIC UNDERFLOOR VENTS come in 2 parts. If extra length is required, an EXTENSION SLEEVE or multiple EXTENSION SLEEVES can be interlinked between the 2 pieces

HORIZONTAL PURPOSE:
In horizontal applications the EXTENSION SLEEVE allows the vent to reach deeper cavity widths

HORIZONTAL INSTALLATION:
The EXTENSION SLEEVE fits onto the lower rear opening of the TELESCOPIC UNDERFLOOR VENT. **(Please note: A REAR EXTENSION ADAPTOR must be used when installing)**

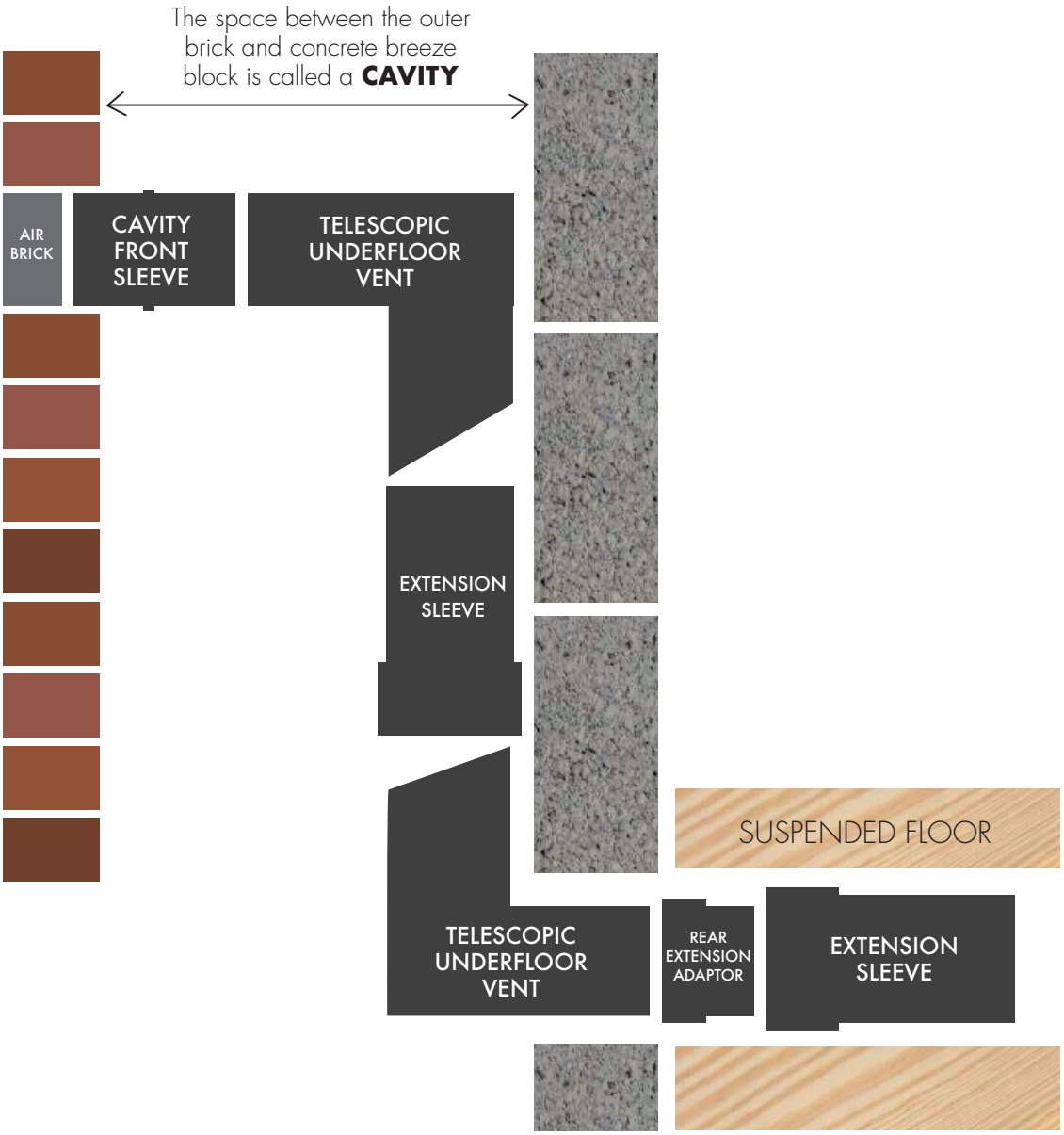

Unit 12B, Metcalf Drive,
Altham Industrial Estate,
Altham, Lancashire,
England, BB5 5TU

Tel 01282 930680
sales@easy-trim.co.uk
www.easy-trim.co.uk